REVISIONS				
	REV.	DESCRIPTION	DATE	APPROVED

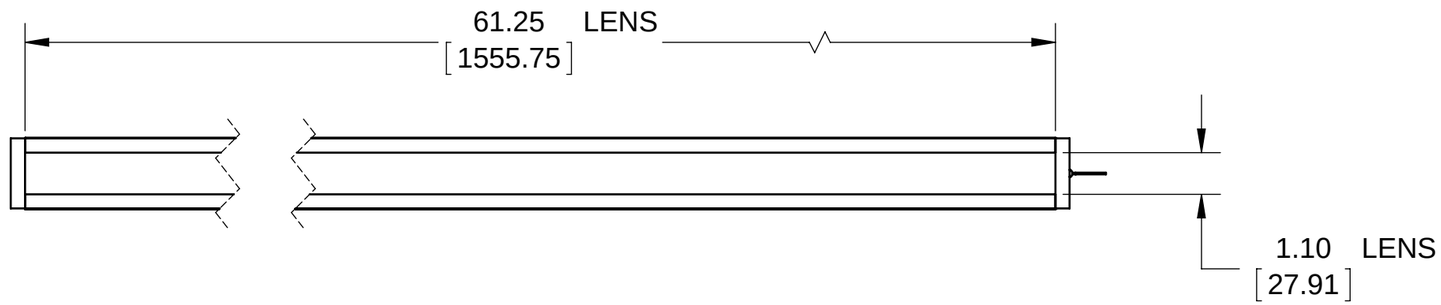

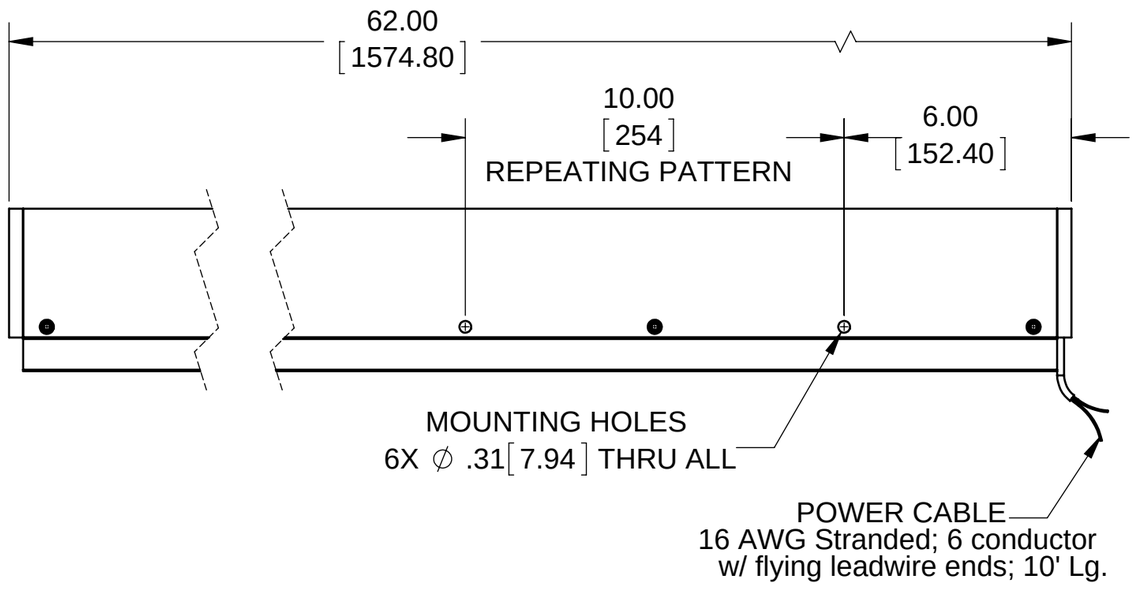

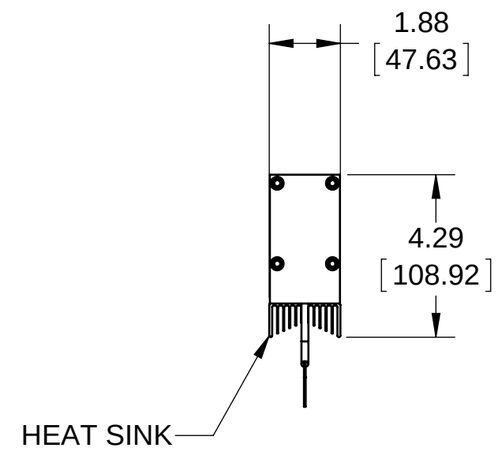

Approval Signature

/ /
Date

Metaphase Technologies, Inc. 211 Sinclair Road, Suite 100, Bristol, PA. 19007 215-639-8699 Fax 215-639-0977

QUANTITY: Per order

MATERIAL: Per BOM

FINISH: Black Anodize

TREATMENT: N/A

TOLERANCE/FINISH
UNLESS OTHERWISE SPECIFIED

INCHES[MM]				125√ RMS [RA3.2um]
X	.X	.XX	.XXX	
[±.76]	±.030 [±.25]	±.010 [±.13]	±.005	ANGLES±1°

THIS DOCUMENT IS THE PROPERTY OF **METAPHASE TECHNOLOGIES, INC.** WHOM MAY LOAN IT, SUBJECT TO RETURN UPON DEMAND. IT INCLUDES CONFIDENTIAL & PROPRIETARY INFORMATION WHICH MAY NOT BE DISCLOSED TO ANY THIRD PARTY, AND/ OR USED FOR ANY PURPOSE CONTRARY TO IT'S INTENDED USE, WITHOUT THE EXPRESSED PRIOR WRITTEN CONSENT OF **METAPHASE TECHNOLOGIES, INC.**

TITLE
Top Assembly- 60" Line Light

USED ON
Per customer

SIZE	DRAWING NUMBER	REV
B	UL-LL1309-1	A

SCALE 1:12 | SHEET 1 OF 2